VA.7.110/..

- **for heavy loads**
- **vibration-free trafficability**
- **optimum edge protection**
- **continuous load transfer**

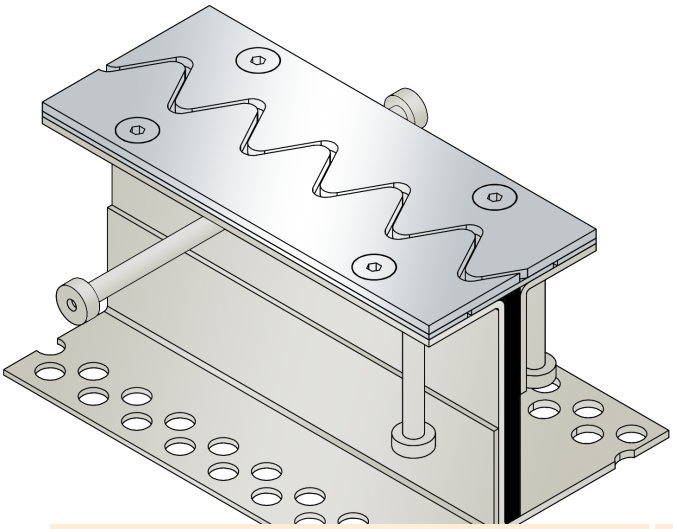

FEATURES
resistant to heavy loads, trafficable by fork-lift trucks, lost formwork element for optimum joint edge protection of work-/compression joints in highly stressed industrial concrete floors, continuous load transfer (thus preventing load-related height offset)

APPLICATIONS
all industrial applications

MATERIAL
substructure hot-dip galvanised steel and visible surface stainless steel V2A (V4A on request), K/VA foam material in the central section

COVERING TYPES
concrete, industrial coverings

TRAFFICABILITY
industrial trucks (lifting trucks, fork-lifts etc.), passenger cars, trucks

FORMED PARTS
corner piece, T-piece, cross piece

TECHNICAL DATA

Movement horizontal:	13 mm (-5/+8 mm)
Visible width:	108 mm
Load rating:	wheel load 5000 kg up to Ø 150 mm, B = 100 mm
Load rating trucks:	600 kN (DIN 1072)
Load rating forklifts:	150 kN (DIN 1055-3)
Supply length:	3 mtr

DESIGNS

ARTICLE NO.	PROFILE HEIGHT (h)
VA.7.110/140	140 mm
VA.7.110/160	160 mm
VA.7.110/180	180 mm
VA.7.110/200	200 mm

Special heights on request.

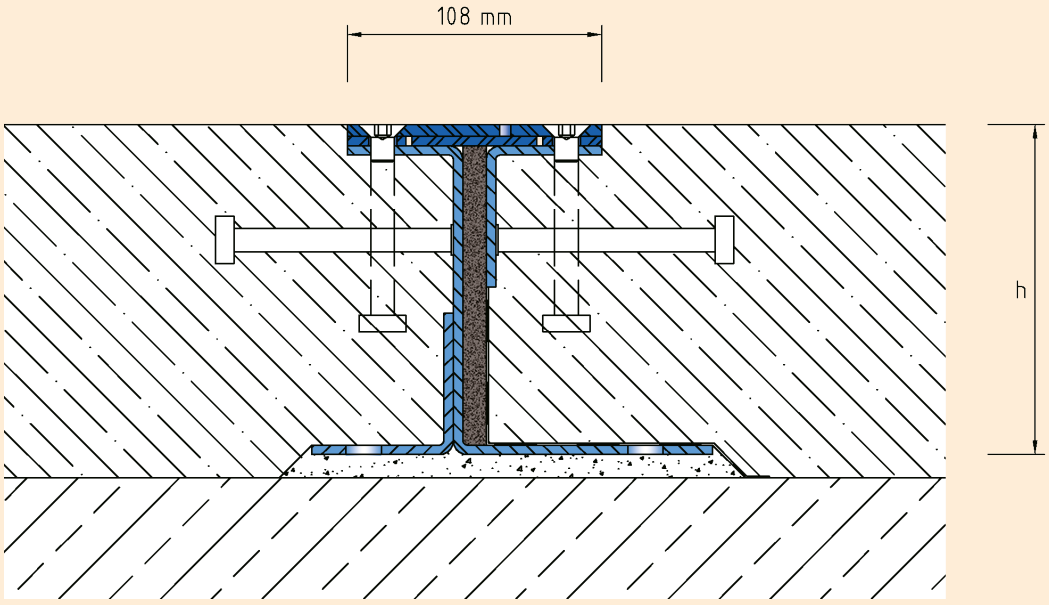

VA.7.110

Subject to technical change without notice.